PROFESSIONAL AUDIO

6N100

Product description

High output mid frequency transducer for horn and multi-way speakers.

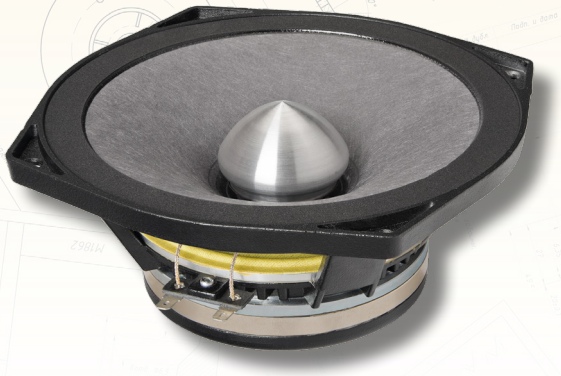

Main features:

- aluminum cast frame;
- removable self-centering neodymium magnet system;
- edgewound copper clad aluminum voice coil;
- aluminum phase plug for improve dispersion control.

Specifications	
Nominal diameter, inches (mm)	6,5(165)
Nominal impedance, Ohm	8/16
Rated power (AES), W *	100
Frequency range, Hz	500-8000
Sensitivity (1W / 1m), dB	101
Minimum impedance, Ohm	15,1@800Гц
Bl product, Tm	19,3
Voice coil inuctance, mH (1kHz)	0,32
Moving Mass Mms, g	7,3
Voice coil	
Diameter, inches (mm)	1,5(38)
Winding material	CCAR
Former material	glass fiber
Winding depth, mm	8,5
Magnetic system	0
Magnetic gap depth, mm	6,5
Flux density, T	1,7
Thiele-Small parameters **	0
Fs, Hz	320
Vas, l	1
Qts	0,38
Qes	0,49
Qms	1,75
Re, Ohm	12,7
Sd cm²	143
Xmax, mm ***	2,6
η, %	6,5
Mounting information	0
Overall diameter, mm	164/188
Baffle cutout diameter, mm	148
Bolt hole diameter, mm	5,5
Bolt circle diameter, mm	172
Height, mm	68
Net weight, kg	1,5

FREQUENCY RESPONSE

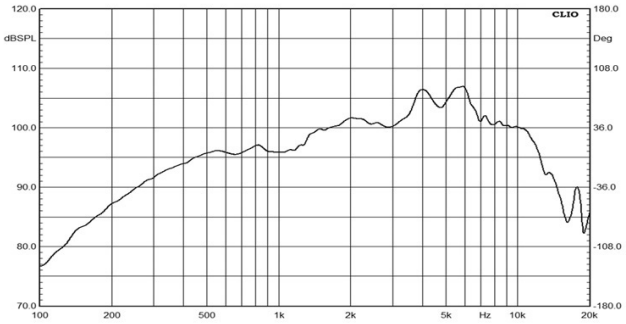

Frequency response measured in a 1200 litre sealed box @ 2,83 v - 1m, 2 π

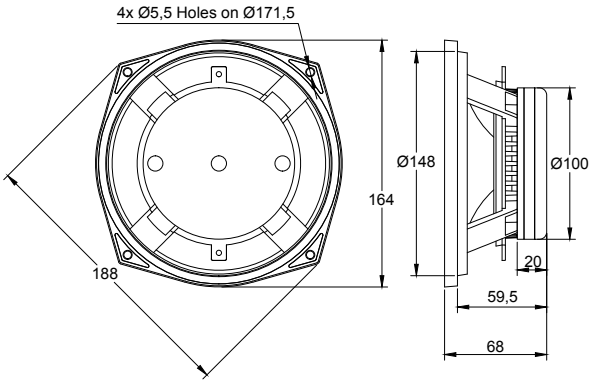

* Rated power is determinited according to AES2 - 1984 (r 2003) standard.

** TS parameters are measured after a preconditioning power test.

*** Xmax is calculated as: $(H_{vc} - H_g) / 2 + H_g / 4$ where H_{vc} is the voice coil winding depth and H_g is the gap depth.

Tel.: +38 04563 3-20-94 reception@magnet.com.ua
Tel./Fax: +38 04563 6-92-62 www.magaudio.biz